S86

860mm WIDE GAS SALAMANDER

Trueheat is an Australian designed brand of commercial cooking equipment. Constructed from stainless steel with a Type 4 matt finish.

The S86 series is a gas heated, heavy duty salamander with fully adjustable height cooking shelf. Two powerful 14mj high speed gas burners radiate intense heat, which seals in the natural flavours to leave a grilled appearance on steaks, chicken, seafood and vegetable.

S86 pictured mounted on optional S21004 stand

STANDARD FEATURES

- Heavy Duty 304 Stainless Steel front, top and sides
- 100% Flame Failure to all burners
- Dual burner controls
- Piezo ignition
- Full width cooking tray with adjustable height (720mm x 360mm)
- 2 x 14mj burners
- Removable covers/sides for oversize dishes
- Cooking shelf doubles as branding plate
- Wall mounting bracket supplied. Drill position: 819mm horizontal. 200mm vertical
- AGA Approved

OPTIONS

- S21004 – Comcater Range Modular stand (910mm) with Salamander Brackets

DIMENSIONS		
External Dimension: 860W x 515D x 440H mm		
Combustible wall clearance: Side: 300mm, Rear: 100mm		
TECHNICAL DATA		
Gas Type: Natural or LP		
Total Output:	Natural 28MJ	LP 26MJ
Burner Ratings:	Natural 14MJ	LP 13MJ
Gas Connection: ½"		
Shipping weight: 81kg		
AGA approval number		
7022		

SPECIFICATIONS ARE SUBJECT TO CHANGE WITHOUT NOTICE.

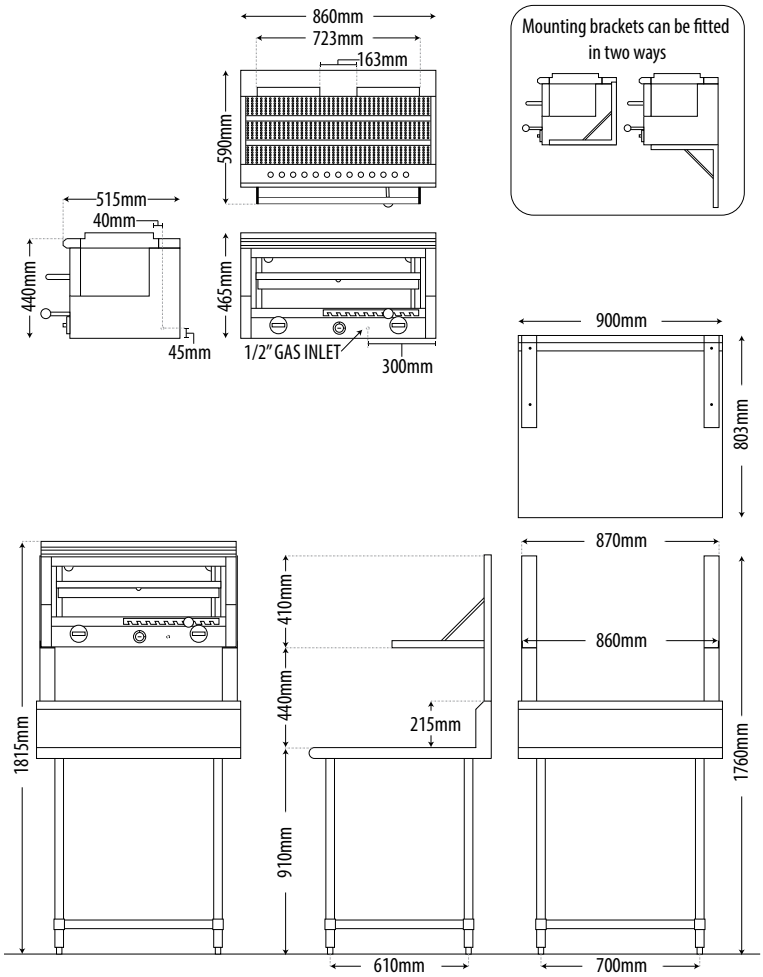

COMCATER - foodservice equipment

National Head Office
156 Swann Drive
Derrimut VIC 3030
Tel: +61 3 8369 4600
Fax: +61 3 8369 4699

Melbourne
96-100 Tope Street
South Melbourne VIC 3205
Tel: +61 3 8369 4600
Fax: +61 3 8699 1299

Sydney
20/4 Avenue of the Americas
Newington, NSW 2127
Tel: +61 2 9748 3000
Fax: +61 2 9648 4762

Brisbane
1/62 Borthwick Avenue
Murarrie QLD 4172
Tel: +61 7 3399 3122
Fax: +61 7 3399 5311

Perth
Unit 16, 7 Abrams Street
Balcatta, WA 6021
Tel: +61 8 6217 0700
Fax: +61 8 6217 0799

www.comcater.com.au

from the world of Comcater!